Electrolux PROFESSIONAL

Plug In SpeeDelight with flexible top plate, ribbed, removable teflon plate, 5kW 230V

ITEM #

MODEL #

NAME #

SIS #

AIA #

603877 (HSG3RPRSE1)	SpeeDelight with flexible top plate, removable ribbed teflon plate (5kW) 230V

Short Form Specification

Item No.

Unit combines 3 cooking technologies: contact, infrared radiation and microwaves to provide perfectly cooked food, heated to the core. The Energy Saving Mode automatically switches to stand-by after an amount of time set by the operator (from 1 to 60 minutes). Delivered with USB port and wi-fi connection to optimize workflow allowing local and remote interaction (temperatures, countdowns, warnings). Lid, top plate, back cover and side panels constructed in 304 AISI stainless steel, bottom in AISI 430 stainless steel, external high-grade composite material paneling and handle. Self-adjusting upper plate adapting to food thickness or blockable in fixed position to avoid contact with food. Possibility to manually adjust the maximum movement of the upper plate. Ribbed top contact plate 8 7/16" × 8 7/16" (215 x215 mm) in aluminum with non-stick coating. Can accept snacks from 2/5" to 3" (10 to 75 mm) thick. Smooth 4 mm thick quartz glass bottom cooking surface 10" x 10" (250 x 250 mm). 2 probes independently control the temperature of the top and bottom plates from 212 to 536° F (100 to 250 °C). Automatic lid holding and lifting at the end of the cooking cycle via mechanical spring. Electronic control with digital 4,3" LED display, countdown display and buzzer at the end of the cycle. 800 W heating element on the top plate and 800 W electrical armored heating elements on the bottom plate. 2 x 1050 W magnetrons for microwaves. Front air inlet and back outlet for efficient cooling ventilation. Ergonomic handle in high-grade composite material for easy movement of the lid. Removable top front panel and removable top cooking plate for better cleanability. 8 preset programs (customizable in: microwave time; total time; temperature).

APPROVAL:

Main Features

- It combines 3 cooking technologies: contact, infrared radiation and microwaves to provide perfectly cooked food, heated to the core.
- Self adjusting ribbed upper plate to heat food adapting to its thickness.
- The Energy Saving Mode automatically switches to stand-by after an amount of time settled by the operator (from 1 to 60 minutes).
- Delivered with USB port and wi-fi connection to optimize workflows allowing local and remote inteaction (temperatures, countdowns, warnings).
- Electronic control with digital 4.3" LED display with adjustable brightness.
- 8 programs selectable on the display.
  The 8 programs can be adjusted by the user. The programmable parameters are:
  -top plate temperature
  -bottom plate temperature
  -total duration of each cycle
  -duration and distribution of microwaves within each cycle.
- Countdown display and buzzer with adjustable volume at the end of the cycle.
- Automatic mechanical lid holding and opening system controlled.
- Ergonomic handle for easy movement of the lid.
- Non-stick pressed tray to be used during all cooking cycles for maximum cleanability, meeting food contact requirements.
- Compliant with Regulation (EC) No 1935/2004 and its amendments, Regulation (EC) No 2023/2006 and its amendments.

Construction

- Aluminum ribbed top contact plate (215 x 215 mm) treated with a special non-stick coating.
- 2 temperature probes for an independent control of the top and bottom plate temperature.
- Smooth 4 mm thick quartz glass bottom cooking surface (250 x 250 mm).
- Independent temperature setting of the top and bottom plates from 50 to 250 °C.
- Automatic lifting of the lid at the end of the cooking cycle via mechanical spring.
- Lid covers, handle and side panels in high-grade reinforced composite material.
- 800W heating element on the top plate.
- 800W electrical armored heating element on the bottom plate.
- 2 x 1050W magnetrons for microwave.
- Front air inlet and back outlet for efficient cooling ventilation allows easy air filters removal and side by side installation.
- IPx4 water protection.

User Interface & Data Management

- Connectivity ready for real time access to connected appliances from remote and data monitoring (requires optional accessory – contact the Company for more details).

Included Accessories

• 1 of Glass saver - silicone protective mat for glass ceramic plate	PNC 653527
• 1 of Cleaning brush	PNC 653623
• 1 of Spatula	PNC 653625
• 1 of 4 rubber feet - Height = 26 mm	PNC 653792
• 1 of Spacer stop kit for rear ventilation	PNC 653800
• 1 of Pressed non-stick tray	PNC 653802
• 1 of Brush with nylon bristles	PNC 653803
• 1 of Brush with brass bristles	PNC 653804

Optional Accessories

• Glass saver - silicone protective mat for glass ceramic plate	PNC 653527	❑
• Cleaning brush	PNC 653623	❑
• Spatula	PNC 653625	❑
• Removable ribbed teflon plate	PNC 653787	❑
• 4 stainless steel feet - Height = 76 mm	PNC 653791	❑
• 4 rubber feet - Height = 40 mm	PNC 653793	❑
• Spacer stop kit for rear ventilation	PNC 653800	❑
• Pressed non-stick tray	PNC 653802	❑
• Brush with nylon bristles	PNC 653803	❑
• Brush with brass bristles	PNC 653804	❑

The company reserves the right to make modifications to the products without prior notice. All information correct at time of printing.

Plug In
SpeeDelight with flexible top plate, ribbed, removable teflon plate, 5kW 230V

Front

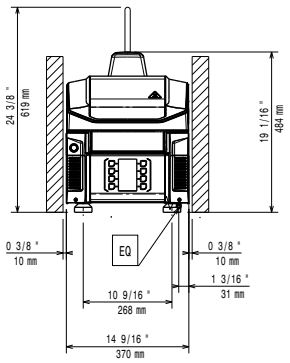

Side

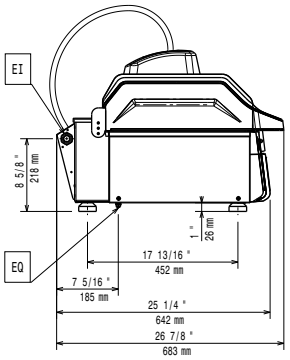

EI = Electrical inlet (power)
EO = Electrical Outlet

Top

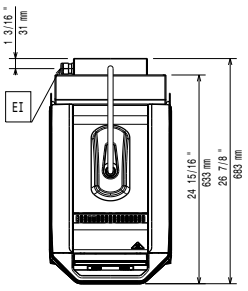

Distances

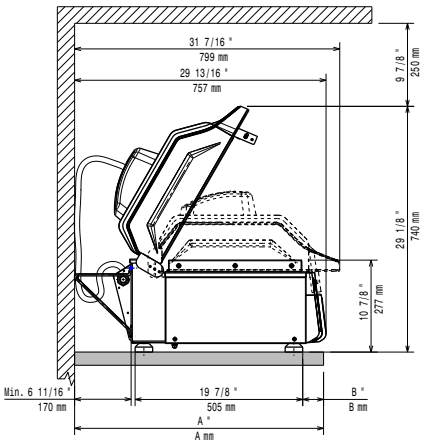

Electric

Supply voltage:	
603877 (HSG3RPRSE1)	220-230 V/1 ph/50 Hz
Rated amps:	22 A
Total Watts:	5 kW
Plug type:	IEC 60309 2P+T

Installation:

Clearance: 190mm from rear vertical panel

Key Information:

Cooking surface (WxD)	250 x 250 mm
External dimensions, Width:	370 mm
External dimensions, Depth:	683 mm
External dimensions, Height:	619 mm
Net weight:	47 kg
Shipping weight:	58 kg
Shipping height:	710 mm
Shipping width:	450 mm
Shipping depth:	760 mm
Shipping volume:	0.24 m³

The company reserves the right to make modifications to the products without prior notice. All information correct at time of printing.

2024.10.08